SPECIFICATION

宏 致 電 子 股 份 有 限 公 司

桃園縣中壢市東園路13號

No.13, Dongyuan Rd., Jhongli City,

Taoyuan County 320, Taiwan (R.O.C.)

TEL: +886-3-463-2808
FAX: +886-3-463-1800

SPEC. NO.: PS-52502-XXXXX-XXX **REVISION:** O

PRODUCT NAME: 0.5 PITCH ZIF FPC CONN.

SMT S/T TYPE

PRODUCT NO: 52502 Series

PREPARED:	CHECKED:	APPROVED:
ZHUWEI	BRAVE	BRAVE
DATE: 2017.10.28	DATE: 2017.10.28	DATE: 2017.10.28

1 Revision History

Rev.	ECN #	Revision Description	Prepared	Date
O	ECN-1710404	NEW SPEC	ZHUWEI	2017.10.28

2 SCOPE

This specification covers performance, tests and quality requirements for 0.5 mm PITCH ZIF FPC CONN. SMT S/T TYPE.

3 APPLICABLE DOCUMENTS

EIA-364: ELECTRONICS INDUSTRIES ASSOCIATION

4 REQUIREMENTS

4.1 Design and Construction

Product shall be of design, construction and physical dimensions specified on applicable product drawing.

4.2 Materials and Finish

4.2.1 Contact: High performance copper alloy (Phosphor Bronze)
Plated: (a) Finish: Refer to order information
(b) Under plate: Nickel-plated all over
4.2.2 Housing: Thermoplastic, High temp. UL94V-0
4.2.3 Actuator: Thermoplastic, High temp. UL94V-0
4.2.4 Ear: High performance copper alloy (Phosphor Bronze)
Plated: (a) Finish: Refer to order information
(b) Under plate: Nickel-plated all over

4.3 Ratings

4.3.1 Working voltage less than 36 volts (per pin)
4.3.2 Voltage: 50 Volts AC (per pin)
4.3.3 Current: 0.5 Amperes (per pin)
4.3.4 Operating Temperature : -40℃ to +85℃
4.3.5 Operating Humidity: 95% Max.

5 Performance

5.1. Test Requirements and Procedures Summary

Item	Requirement	Standard
Examination of Product	Product shall meet requirements of applicable product drawing and specification.	Visual, dimensional and functional per applicable quality inspection plan.
ELECTRICAL		
Item	**Requirement**	**Standard**
Low Level Contact Resistance	50 m Ω Max.(initial)per contact 20 m Ω Max. Change allowed	Mate connectors, measure by dry circuit, 20mV Max., 100mA Max. 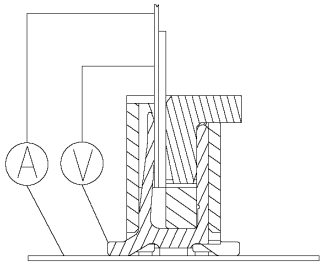 (EIA-364-23)
Insulation Resistance	Initial: 1000 M Ω Min. Final: 100 M Ω Min.	Unmated connectors, apply 500 V DC between adjacent terminals. (EIA-364-21)
Dielectric Withstanding Voltage	No discharge, flashover or breakdown. Current leakage: 2 mA max.	AC 200 VAC Min. at sea level for 1 minute. Test between adjacent contacts of unmated connectors. (EIA-364-20)
Temperature rise	30℃ Max. Change allowed	Mate connector: measure the temperature rise at rated current until temperature stable. The ambient condition is still air at 25℃ (EIA-364-70,METHOD1,CONDITION1)

MECHANICAL

Item	Requirement	Standard
Durability	10 cycles.	The sample should be mounted in the tester and fully mated and unmated the number of cycles specified at the rate of 25 ± 3mm/min. (EIA-364-09)
FPC Retention Force	Refer to 8. FPC retention force	Insert the actuator, pull the FPC at the speed rate of 25± 3 mm/min for 10 cycles. 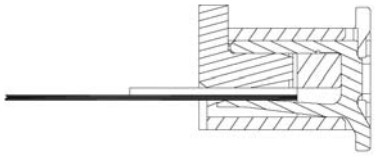
Terminal / Housing Retention Force	0.4kgf MIN.	Apply axial pull out force at the speed rate of 25 ± 3 mm/minute. On the terminal assembled in the housing. 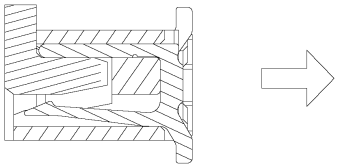
Actuator Insertion / Separation Force	Refer to 9. Actuator insertion/separation force	A connector shall be soldered on a board and inserted and separation at speed of 25± 3 mm/min for 10 cycles.
Vibration	1 μs Max.	The electrical load condition shall be 100 mA maximum for all contacts. Subject to a simple harmonic motion having amplitude of 0.76mm (1.52mm maximum total excursion) in frequency between the limits of 10 and 55 Hz. The entire frequency range, from 10 to 55 Hz and return to 10 Hz, shall be traversed in approximately 1 minute. This motion shall be applied for 2 hours in each of three mutually perpendicular directions. (EIA-364-28 Condition I)

Item	Requirement	Standard
Shock (Mechanical)	1 μs Max.	Subject mated connectors to 50 G's (peak value) half-sine shock pulses of 11 milliseconds duration. Three shocks in each direction shall be applied along the three mutually perpendicular axes of the test specimen (18 shocks). The electrical load condition shall be DC 100mA maximum for all contacts. (EIA-364-27, test condition A)

ENVIRONMENTAL

Item	Requirement	Standard
Resistance to **Reflow** Soldering Heat	Second Reflow process must be taken after the product temperature has down to room condition. See Product Qualification and Test Sequence Group 10	Pre Heat：150℃~180℃, 60~120sec. Heat：230℃ Min., 40sec Min. Peak Temp.：260℃Max, 10sec Max. Reflow number cycle：2 times
Thermal Shock	See Product Qualification and Test Sequence Group 4	Mate module and subject to follow condition for 5 cycles. 1 cycles: -40 +0/-3 ℃, 30 minutes +85 +3/-0 ℃, 30 minutes (EIA-364-32, test condition A)
Humidity	See Product Qualification and Test Sequence Group 4	Mated Connector 40℃, 90~95% RH, 96 hours. (EIA-364-31,Condition A, Method II)
Temperature life-Heat	See Product Qualification and Test Sequence Group 5	Subject mated connectors to temperature life at 85℃ for 96 hours. Measure Signal. (EIA-364-17, Test condition A)
Temperature life-Cold	See Product Qualification and Test Sequence Group5	Subject mated connectors to temperature life at -40℃ for 48 hours. Measure Signal. (EIA-364-17, Test condition A)

Item	Requirement	Standard
Salt Spray	See Product Qualification and Test Sequence Group 6	Subject mated/unmated connectors to 5% salt-solution concentration, 35℃ for 8 hours. (EIA-364-26,Test condition B)
Solder ability	Solder able area shall have minimum of 95% solder coverage.	Subject the test area of contacts into the flux for 5-10 sec. And then into solder bath, Temperature at 245 ±5℃, for 4-5 sec. (EIA-364-52)
Hand Soldering Temperature Resistance	Appearance ： No damage	T≧350℃ , 3 sec at least.

Note 1. Flowing Mixed Gas shell be conduct by customer request.

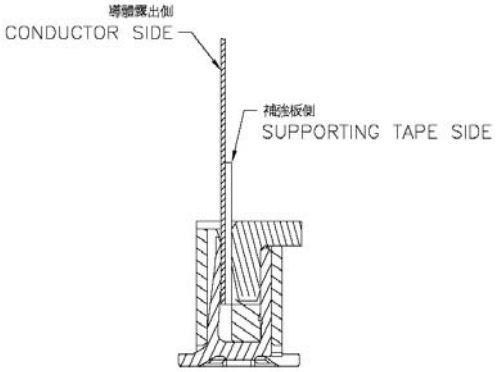

6 INFRARED REFLOW CONDITION

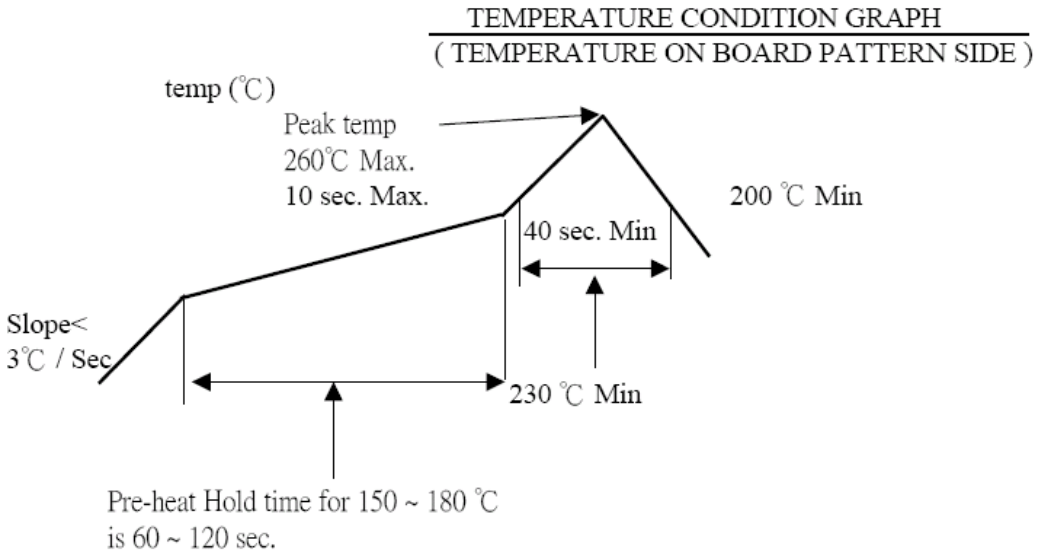

7 PRODUCT QUALIFICATION AND TEST SEQUENCE

Test or Examination	Test Group										
	1	2	3	4	5	6	7	8	9	10	11
	Test Sequence										
Examination of Product				1、7	1、6	1、4	1、4			1	1
Low Level Contact Resistance		1、7	1、4	2、10	2、9	2、5	2、5			3	
Insulation Resistance				3、9	3、8						
Dielectric Withstanding Voltage				4、8	4、7						
Temperature rise	1										
Durability		4									
Vibration			2								
Shock (Mechanical)			3								
Thermal Shock				5							
Humidity				6							
Temperature life-Heat					5						
Temperature life-Cold						3					
Salt Spray							3				
Solder ability								1			
FPC Retention Force		2、5									
Terminal / Housing Retention Force									1		
Actuator insertion / separation Force		3、6									
Resistance to Soldering Heat										2	
Hand Soldering Temperature Resistance											2
Sample Size	2	4	4	4	4	4	2	4	4	4	4

8 FPC RETENTION FORCE

NO. OF Ckt.	Retention Force (Min)	NO. OF Ckt.	Retention Force (Min)
4	0.15Kgf	22	0.7Kgf
		23	
6	0.2Kgf	24	
7		25	0.8Kgf
8		26	
9	0.3Kgf	27	
10		28	0.9Kgf
11		29	
12	0.4Kgf	30	
13		31	1.0Kgf
14		32	
15	0.5Kgf	33	
16		34	1.1Kgf
17		35	
18	0.6Kgf	36	
19		37	1.2Kgf
20		38	
21		39	
		40	
		50	1.2Kgf

9 ACTUATOR INSERTION/SEPARATION FORCE

NO. OF Ckt.	Insertion Force (Max)	Separation Force (Min)	NO. OF Ckt.	Insertion Force (Max)	Separation Force (Min)
4	1.45Kgf	0.1Kgf	26	3.85Kgf	0.5Kgf
6			27		
7			28		
8			29		
9			30		
10			31	4.35Kgf	0.6Kgf
11	2.0Kgf	0.2Kgf	32		
12			33		
13			34		
14			35		
15			36	4.85Kgf	0.7Kgf
16	2.65Kgf	0.3Kgf	37		
17			38		
18			39		
19			40		
20			50	4.85 Kgf	0.7Kgf
21	3.25Kgf	0.4Kgf			
22					
23					
24					
25					